Airfi Sento controller

Installation manual

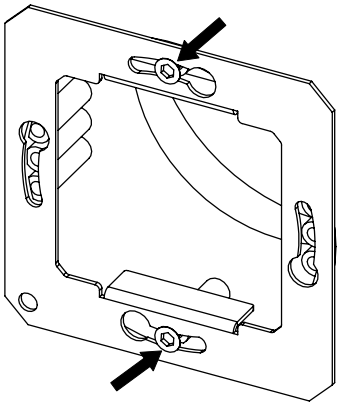

1 Place mounting frame according to the picture. Fasten with mounting screws top and below (arrows in the picture). Wiring sequence according to the print on the Airfi units external junction box.

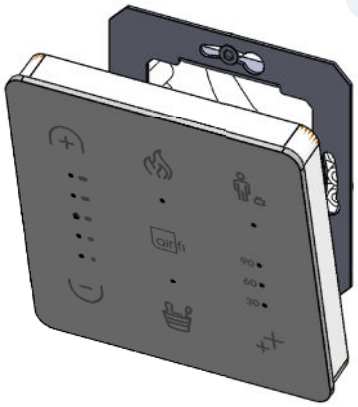

2 Position lower metal spring and push it towards wall.

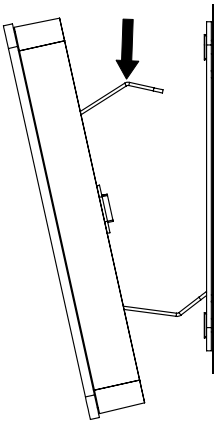

3 If necessary you can push the top spring (arrow in the picture).

Remove Sento controller by pulling the top part away from the wall.

Airfi Oy AB
Piilipuunkatu 11
21200 Raisio, Finland

02 430 3300
www.airfi.fi
info@airfi.fi



Controller Wiring

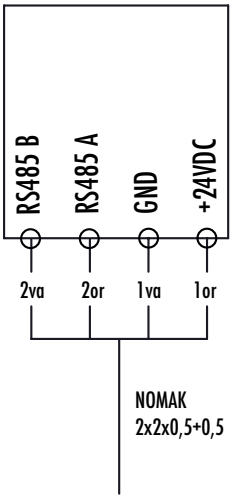

In the junction box, wiring sequence according to the print on the box. In the junction box, leave the jumper wire between Speed1 (or Speed2/Speed3) and +24COM. This determines the speed in which the unit starts after power up.

Sento, hard-wired 1-piece socket (SU)
Recommended installation height 1,6m

DIP
1:RS485 Termination ON/OFF
2:Saunabutton ON/OFF
3:Fireplacebutton ON/OFF
4:Controller 1 master OFF (default)
Controller 2 slave ON
(second controller must support this and the ventilation units sw >2.9.0)

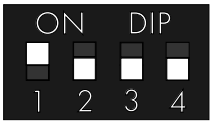

DIP-switch default settings

608000572D1 – We reserve the right to make changes.